GONIO WAY RVF type

Nippon Bearing's Gonio Way family has adopted the RVF type with a flat installation surface for easy processing of tables and beds.
NB Gonio Way (RVF type) is a low-friction, non-recirculating curved motion bearing utilizing precision cross-rollers. The RVF type is ideal for changing the gradient or for obtaining an accurate gradient angle without changing the center of rotation. This component is used mainly in optical equipment and measuring devices where high precision is required.

Structure and Advantages

The NB Gonio Way RVF type consists of curved tracking bases with precisely ground V-grooves and flat installation surfaces, as well as a curved roller cage in which cross rollers are fitted. Precision rollers are employed as the rolling elements. Since the rolling elements do not recirculate, the frictional resistance will not vary significantly, providing curved movement with extremely low frictional resistance.

Flat Installation Surface

The flat installation surfaces of the RVF type do not require complicated machining of tables and beds when installing the product. As a result, machining costs can be reduced greatly.

Same Rotation Center

The curved V-grooves, which are finished with a precise grinding process, provide an accurate center of rotation.
Furthermore, the products are composed to provide identical rotation centers when products of each size are installed to two axes. (Refer to Table H-17.)

Low Frictional Resistance and Minute Motion

The precision grinding work and curved roller cage allow for extremely low frictional resistance. The negligible difference between starting and dynamic frictions allows the RVF type to follow minute movements accurately, realizing curved movement of high accuracy.

Low Noise

Since NB Gonio Way employs a non-recirculating design, noise will not be generated at the circulating area. In addition, the curved roller cage realizes quiet operation without contact noise between the rolling elements.

Figure H-35 Structure of RVF Type Gonio Way

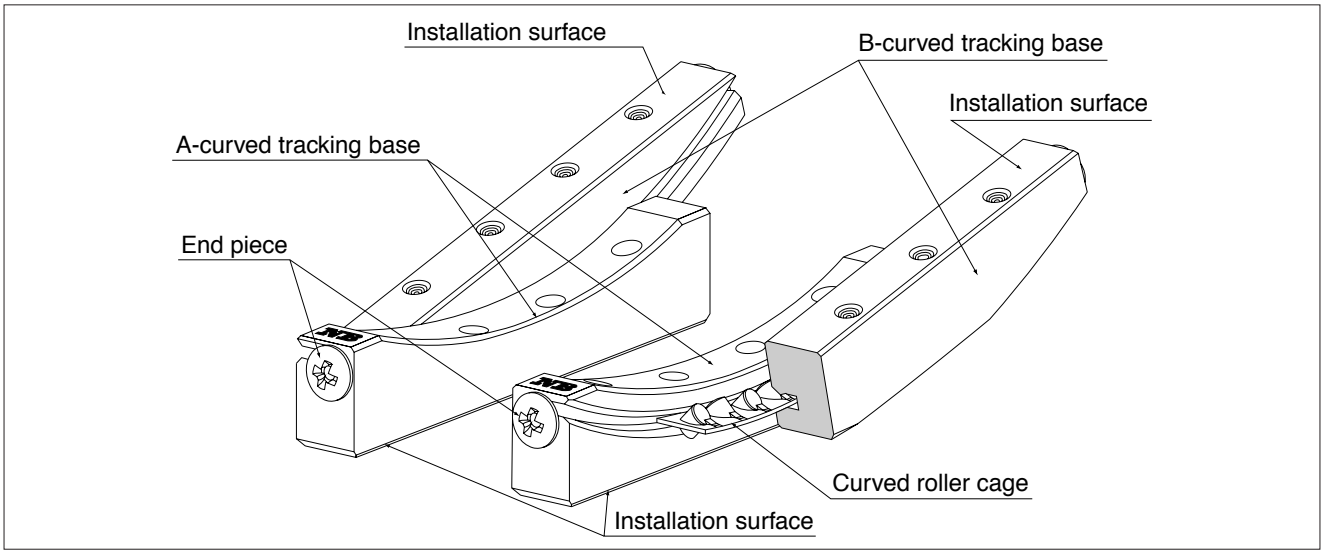

PACIFIC INTERNATIONAL BEARING SALES, INC.
800.228.8895 • WWW.PACIFICBEARINGSALES.COM

ACCURACY

The accuracies of the Gonio Way RVF type are represented by mutual dimensional errors of four units, which are measured along the overall length using the procedure as shown in Figure H-36.

Table H-15 Accuracy

Part Number	Mutual Error between A and B Mutual Error between C and D	Mutual Error between E and F Mutual Error between H and I
RVF2050- 70	10	10
RVF2050- 87		
RVF2050-103		
RVF2050-120		
RVF3070- 85		
RVF3070-110		
RVF3100-125		
RVF3100-160		

Figure H-36 Measuring Method of Accuracy

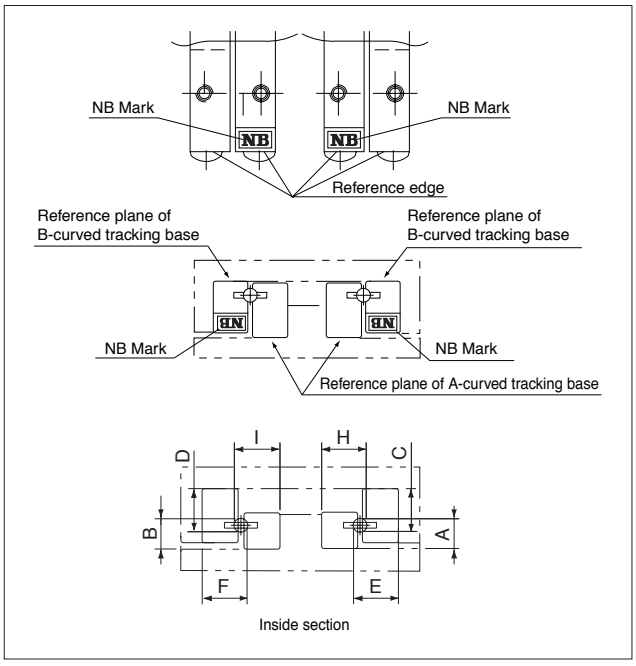

LIFE CALCULATION

The life of an NB miniature slide table can be calculated using the following equations:

Travel life:

$$L = \frac{90}{\theta} \cdot \left(\frac{f_T}{f_W} \cdot \frac{C}{P} \right)^{\frac{10}{3}}$$

L: travel life (106round trips) θ :rotating angle (degree)
f_T : temperature coefficient fw: load coefficient
C: basic dynamic load (N) P: applied load (N)
※Refer to page Eng-5 for the coeffieients.

Life Time:

$$L_h = \frac{L \cdot 10^6}{60 \cdot n}$$

L_h: life time (hr) s: stroke length (m)
n_1: number of strokes per minute (cpm)

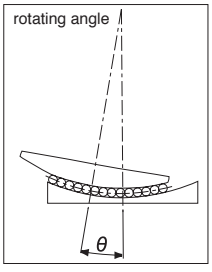

ACCURACY OF MOUNTING SURFACE

To maximize the performance of NB's Gonio Way RVF type, it is important to finish the installation surface with high accuracies.

Parallelism of plane 1 against plane A
Perpendicularity of plane 2 against plane A
Perpendicularity of plane 5 against plane A
Parallelism of plane 3 against plane B
Perpendicularity of plane 4 against plane B
Perpendicularity of plane 6 against plane B
Parallelism of plane 2 against plane C
Parallelism of plane 4 against plane C
Mutual error between the size of a and b

Figure H-37 Accuracy of installation surface

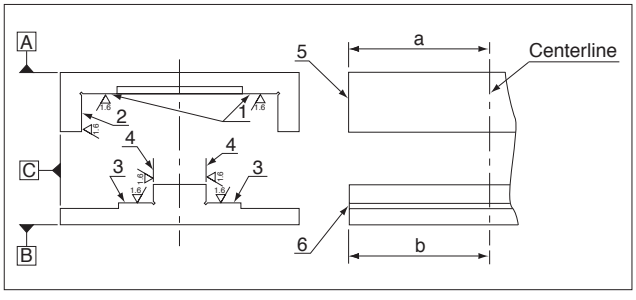

INSTALLATION

Figure H-38. Installation Example

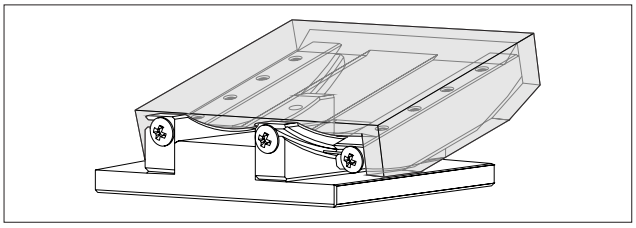

Installation Procedure

Setting the curved tracking bases temporarily

(1) Remove burrs, stains, and dust from the installation surface of the curved tracking bases of tables and beds. Foreign objects must be kept out of the assembly work as well.

(2) Apply oil of low viscosity to contact surfaces, check the reference edges of an A-curved tracking base and bed, and then tighten the bolts temporarily. (Figure H-39)

(3) Align the reference edges (NB mark side) of a B-curved tracking base and an A-curved tracking base to the same orientation. Then, insert the curved roller cage between the curved tracking bases at the center area. Make sure that the curved roller cage will not interfere with the curved raceway grooves of the curved roller tracking bases. (Figure H-39b)

(4) Check the reference edge of the table, set the table over the B-curved tracking base, and then secure the table temporarily. (Figure H-39c)

Setting four curved tracking bases in parallel position

(5) Move the table to the maximum stroke ends of both sides and adjust the setting so that the curved roller cage is positioned at the center of the curved tracking base.

(6) Move the table to the center position and tighten the adjustment screw with slightly strong torque * by using a torque wrench. (Figure H-39d)

* "Slightly strong torque" here means slightly stronger than the torque at which the oscillation of the test indicator is stabilized at the minimum value when the table is moved right and left, or when pressure is applied to the rolling direction while the test indicator is attached to the side face (reference side) of the table. (Figure H-40i)

(7) Move the table to the maximum stroke end of one side and tighten the regulating screw on the curved roller cage with the same torque as in step (6). (Figure H-39e)

Figure H-39. Installation Procedure (1)

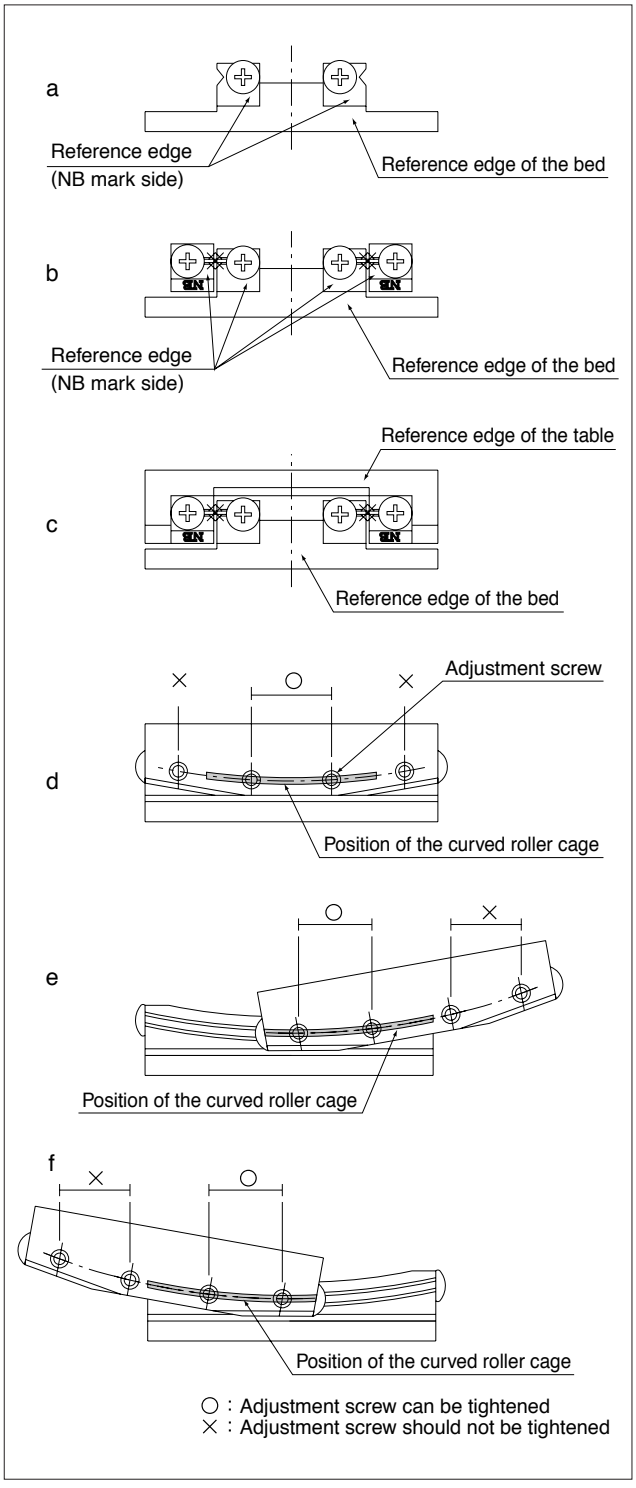

PACIFIC INTERNATIONAL BEARING SALES, INC.
800.228.8895 • WWW.PACIFICBEARINGSALES.COM

(8) Move the table to the maximum stroke end of the other side and tighten the adjustment screw with a torque wrench by repeating the procedure above. (Figure H-39f)

Securing the curved tracking bases

(9) Mount an edge reference plate between the reference edge of the A-curved tracking base and end piece, press it against the reference edge of the bed, and then tighten only the mounting bolt in the middle. (Figure H-40g)

(10) Repeat the procedure above to mount an edge reference plate between the reference edge of the B-curved tracking base and the end piece. Press it against the reference edge of the bed, and then tighten only the mounting bolt in the middle. (Figure H-40h) In order to maintain parallelism of curved tracking bases, do not cycle the table during this process and make sure that there is no clearance between the edge of the table and the edge reference plate.

(11) Secure the rest of the mounting bolts on the curved roller cage one by one while moving the table as instructed in steps (7) and (8).

Adjusting the preload

(12) Move the table to the right and left with the test indicator attached to the side face of the table (reference side). Or, apply pressure in the rolling direction and confirm that the oscillation of the attached indicator is stabilized at the minimum level. (Figure H-40i)

(13) Return the mounting bolt on the B-curved tracking base at the adjustment screw side to the temporary setting.

(14) Return the table to the center position, slightly loosen the adjustment screw in the middle, and then gradually loosen the adjustment screws on the curved roller cage while moving the table as instructed in steps (7) and (8). Make sure not to reduce the preload too much.

(15) Finally, secure the B-curved tracking base at the adjustment screw side, which has been installed temporarily. Secure the mounting bolts on the curved roller cage one by one while moving the table as instructed above.

Table H-16 Recommended Tightening Torque for Mounting Bolts Unit/N•m

Nominal Designation of Screw	Tightening Torque
M2.5	0.5
M3	1.1

(When using stainless-steel screw A2-70 on aluminum seating for tightening)

Figure H-40 Installation Procedure (2)

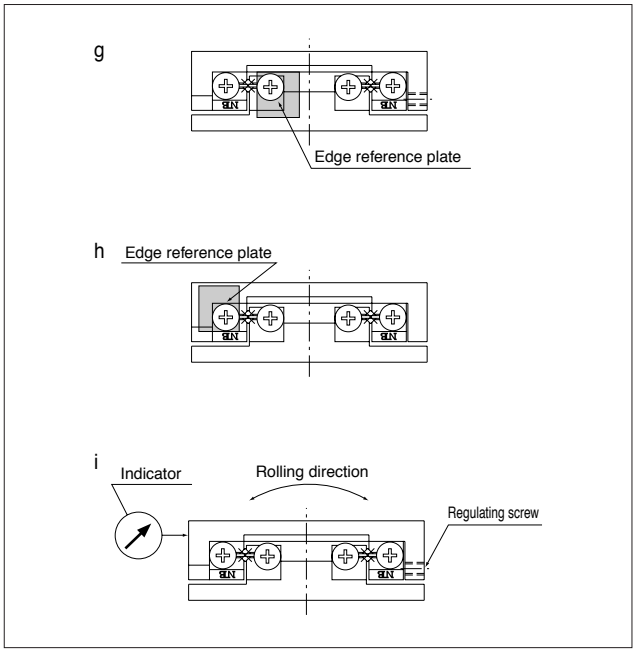

2-AXES AND CUSTOM SPECIFICATIONS

When incorporating RVF type units onto two axes as illustrated in Figure H-41, adjust the height of one lifting axis as instructed in Table H-17. Then, adjust dimension b (the height of the installation surface of the A-curved tracking base) in Figure H-41 to the same dimension in order to obtain the identical rotation center for the two axes. In addition, requests can be made for custom specifications including table units fitted for two axes, non-standard lengths for curved tracking bases, the radius of rotation, the rotation range, and the number of rollers. Contact NB for further information and arrangements.

Table H-17 Two-Axes Specifications — Unit/mm

Model Number Combinations	a	R_1	R_2
RVF2050- 70 RVF2050- 87	17	70	87
RVF2050-103 RVF2050-120	17	103	120
RVF3070- 85 RVF3070-110	25	85	110
RVF3100-125 RVF3100-160	35	125	160

Figure H-41 Two-Axes Specifications

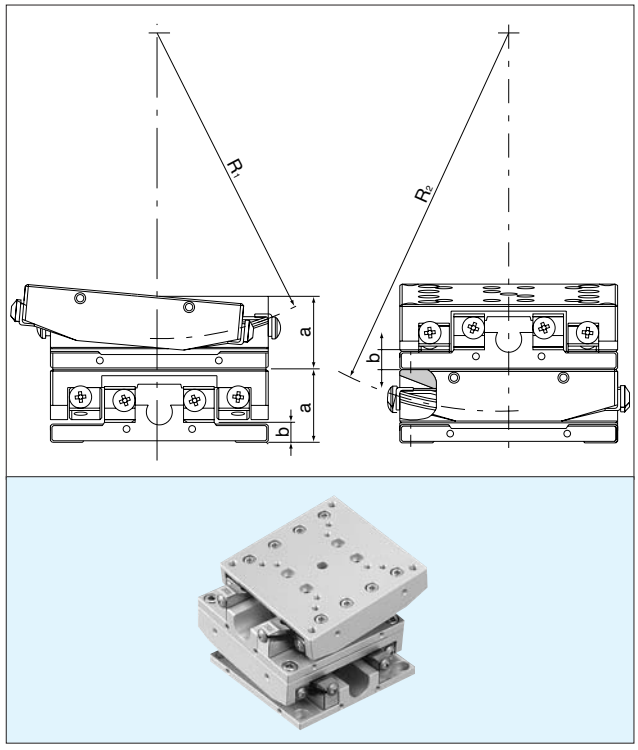

PACIFIC INTERNATIONAL BEARING SALES, INC.
800.228.8895 • WWW.PACIFICBEARINGSALES.COM

PRECAUTIONS FOR USE

Lubrication:

NB gonio ways are lubricated using lithium soap grease prior to shipment, so they can be used immediately. Periodic application of a similar type grease is recommended depending on the operating conditions.
NB also provides low dust generation grease for the linear system. Please refer to page Eng-20 for further details.

Dust Prevention:

If a foreign matter, such as dust and dirt, enters the inside of the NB gonio way, it may deteriorate the accuracy and life of the system. A gonio way used in a hostile environment should be protected with a cover.

Use Environment:

The recommended operating temperature range of the NB gonio way is -20˚C to 110˚C.

Adjustment:

Inaccurate adjustment of the accuracy on the mounting surface or pre-load may reduce the motion accuracy, resulting in skewing and shortening of gonio way life. The adjustment should be carried out carefully.

Cage Slippage:

When used under high-speed, unbalanced-load, or vibrational conditions, cage slippage may occur. The stroke distance should be determined with sufficient margin, and an excessive pre-load should not be applied.

End Pieces:

End pieces are attached to each end of the NB gonio way to prevent removal of the curved roller cage. Do not use as a mechanical stopper.

Careful Handling:

Dropping a NB gonio way may result in scratches or dents on the raceway surface, preventing smooth motion and affecting accuracy. Care should be exercised in handling.

Use as a Set:

The accuracy tolerance of a gonio way is designed to be adjusted within a particular set of components. If components from different sets are used, accuracy may be affected.

Allowable Load:

The allowable load is a load under which the sum of elastic deformation of the rolling element and the raceway in the contact area subject to the maximum contact stress is small enough to guarantee smooth rolling movement. Where very smooth and highly accurate liner motion is required, make sure to use the product within the allowable load values.

RVF TYPE

— SVT6/SVT9 —

Part number configuration
Example) **RVF 3 100 - 125 - 16Z**

- RVF Type
- Size
- Total length of curved tracking base
- Radius from rotation center
- Number of rollers

※ Refer to page H-68 for infomation on cage types.

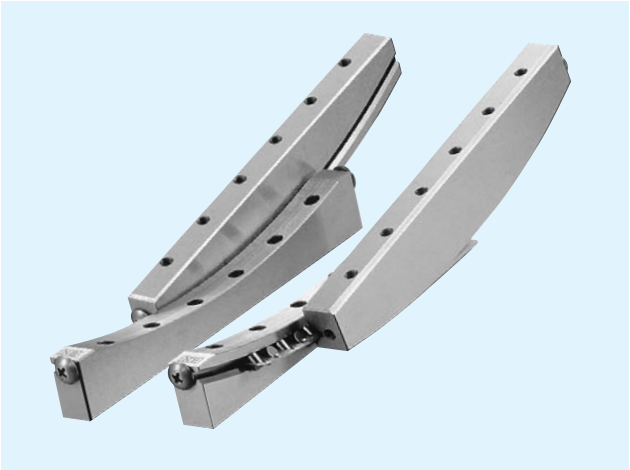

Part Number	Rotation Range	Roller Diameter D mm	Number of Rollers Z	Major Dimensions L mm	R mm	R_1 mm	R_2 mm	H_1 mm	H_2 mm	h_1 mm	h_2 mm
RVF2050- 70-11Z	±5°	2	10	50	70	67	73	72.5	64.5	7.5	7.5
RVF2050- 87-10Z			10		87	84	89.5	89.5	81.5	7.5	7.5
RVF2050-103-10Z			10		103	100	106	105.5	97.5	7.5	8
RVF2050-120- 9Z			9		120	117	123	122.5	114.5	7.5	8
RVF3070- 85-11Z	±10°	3	10	70	85	81	89	89.5	75.5	14	12.5
RVF3070-110-10Z			10		110	106	114	114.5	100.5	12.8	12.5
RVF3100-125-16Z			16	100	125	121	129	129.5	110.5	17.5	18
RVF3100-160-14Z			14		160	156	164	164.5	145.5	15	18

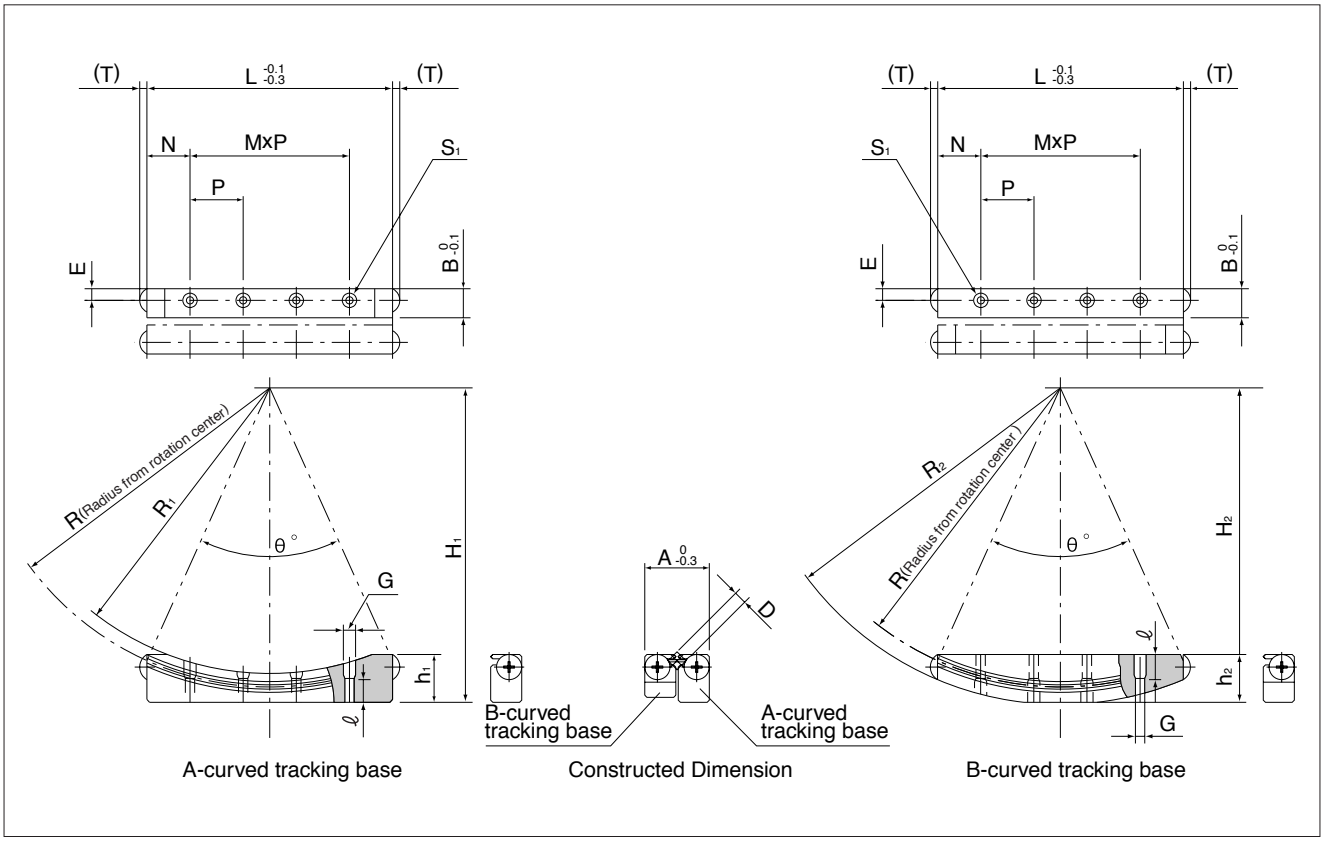

(One set includes A-curved tracking bases (2), B-curved tracking bases (2), curved roller cages (2), end pieces (8), and installation referense plate (2).)

A	B	M×P	N	E	S_1	ℓ	G	T	θ°	allowable load F	Basic Load Rating Dynamic C	Basic Load Rating Static Co	Weight	size
mm	mm	mm	mm	mm		mm	mm	mm		N	N	N	g	
15	7.25	3×12.5	6.25	2.5	M2.5	4	3	2.1	41.8°	800	1,179	1,468	66	**2050- 70-10z**
									33.3°	810	1,179	1,468	70	**2050- 87-10z**
		3×13	5.5					2.1	28.0°	815	1,179	1,468	70	**2050-103-10z**
									24.0°	657	997	1,174	70	**2050-120- 9z**
18	8.5	3×15	12.5	3	M3	7	3.5	1.9	48.6°	1,840	2,631	3,515	182	**3070- 85-10z**
									37.1°	1,870	2,631	3,515	182	**3070-110-10z**
	8.5	5×15	12.5	3	M3	7	3.5	1.9	47.1°	2,950	3,745	5,626	327	**3100-125-16z**
									36.4°	2,630	3,387	4,921	323	**3100-160-14z**